ERM 18 E Ex e

short description

Semi-centrifugal duct fan, DN 180, single-phase AC, explosion proof

Article number	0080.0290

Technical Data

Air flow volume	310 m³/h
Rotating speed	2,780 1/min
Type of voltage	Alternating current
Rated voltage	230 V
Frequency	50 Hz
Nominal output	50 W
I_{nom}	0.25 A
I_A / I_N	2.5
Degree of protection (IP)	54
Insulation class	B
Mains cable	3 × 1.5 mm^2
Installation site	Duct
Installation position	vertical, horizontal
Housing material	Synthetic material
Colour	Signal black, similar to RAL 9004
Weight	3 kg
Nominal size	180 mm
Airstream temperature at nominal current	50 °C
Ambient temperature:	50 °C
Explosion protection	Ex II 2G
Temperature class	T4
Range	C
EAN	4012799802907
Total L_{WA5}, S5 (free inlet sound pressure level)	66 dB(A)

ERM 18 E Ex e

Characteristic curve

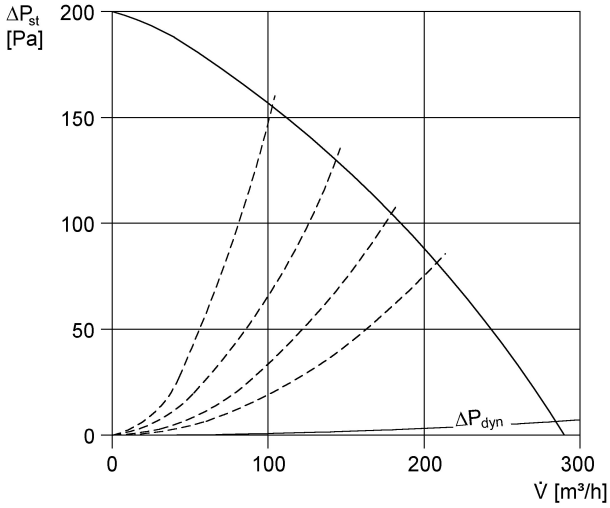

Dimensions [mm]

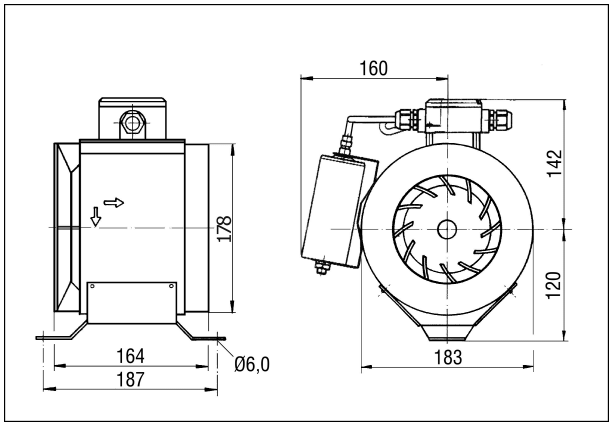

ERM 22 E Ex e

short description

Semi-centrifugal duct fan, DN 220, single-phase AC, explosion proof

Article number	0080.0288

Technical Data

Air flow volume	560 m³/h
Rotating speed	2,860 1/min
Type of voltage	Alternating current
Rated voltage	230 V
Frequency	50 Hz
Nominal output	200 W
I_{nom}	0.92 A
I_A / I_N	3.1
Degree of protection (IP)	54
Insulation class	B
Mains cable	3 × 1.5 mm^2
Installation site	Duct
Installation position	vertical, horizontal
Housing material	Synthetic material
Colour	Signal black, similar to RAL 9004
Weight	5.3 kg
Nominal size	200 mm
Airstream temperature at nominal current	50 °C
Ambient temperature:	50 °C
Explosion protection	Ex II 2G
Temperature class	T3
Range	C
EAN	4012799802884
Total L_{WA5}, S5 (free inlet sound pressure level)	64 dB(A)
Total L_{WA8}, S5 (housing and free outlet sound pressure level)	66 dB(A)

ERM 22 E Ex e

Characteristic curve

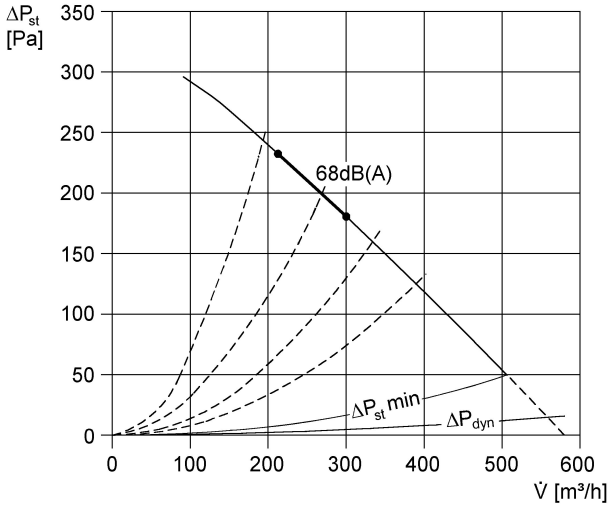

Dimensions [mm]

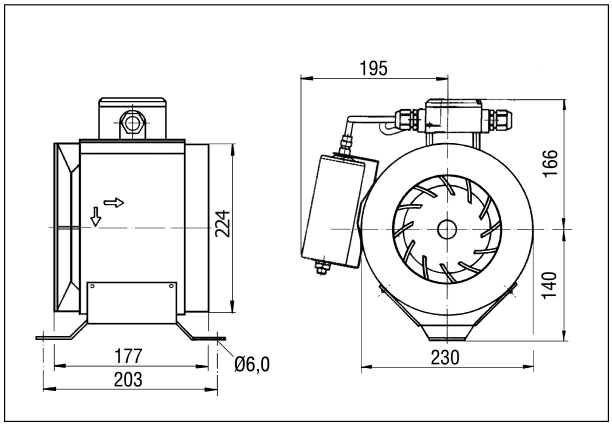

ERM 25 E Ex e

short description

Semi-centrifugal duct fan, DN 250, single-phase AC, explosion proof

Article number	0080.0249

Technical Data

Air flow volume	870 m³/h
Rotating speed	2,820 1/min
Type of voltage	Alternating current
Rated voltage	230 V
Frequency	50 Hz
Nominal output	300 W
I_{nom}	1.4 A
I_A / I_N	3.7
Degree of protection (IP)	54
Insulation class	F
Mains cable	3 × 1.5 mm^2
Installation site	Duct
Installation position	vertical, horizontal
Housing material	Synthetic material
Colour	Signal black, similar to RAL 9004
Weight	6.8 kg
Nominal size	250 mm
Airstream temperature at nominal current	50 °C
Ambient temperature:	50 °C
Explosion protection	Ex II 2G
Temperature class	T3
Range	C
EAN	4012799802495
Total L_{WA5}, high (free inlet sound pressure level)	77 dB(A)

ERM 25 E Ex e

Characteristic curve

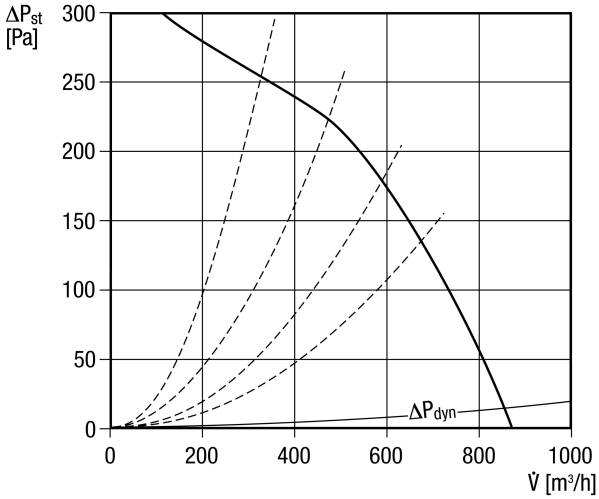
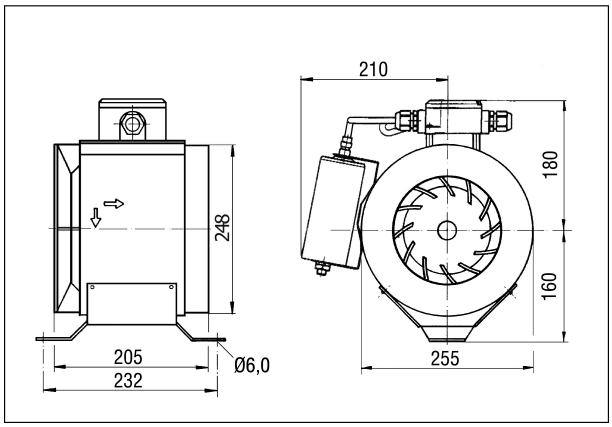
Dimensions [mm]